Innometrics
Trusted RFID Cards & Tags Supplier
boby@innometricstech.com
www.innometricstech.com
+0086-15976891693

# ABS ON-METAL TAG



## Model:INNO-MTTAG-ABS14538

### Profile

This tag is made of ABS material,
developed with customized UHF antenna,
good performance with metal surface installation.
Widely used widely used in indoor and outdoor asset management and inspection management and logistics tracking management

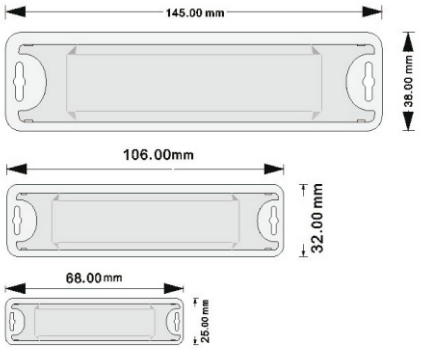


### Key Features:

- Rugged tag for harsh environment
- Multiple installation method available
- High sensitivity for both reading and writing
- Easy and Reliable performance on-metal installation
- External number for easy identification and access control

### Specification:

| | |
|---|---|
| **Tag Type:** | On-Metal UHF Tag |
| **Material:** | ABS |
| **Color:** | Black, Yellow (customized available) |
| **Dimensions:** | 145*38mm/106*32mm/68*25mm |
| **Thickness:** | 12mm |
| **Chips:** | Alien H3/H9, NXP U8/U9, Impinj M730, etc |
| **Protocol:** | EPC Class1 Gen2, ISO18000-6C |
| **Operating Frequency:** | 860-960Mhz |
| **Read Range (Fix Reader):** | 1~15m on metal (may change based different readers and environment) |

| | |
|---|---|
| **Data storage:** | up to 10 years |
| **Re-write:** | 100,000 times |
| **Warranty:** | 1 year |
| **Operating Temp:** | -30°C to +85°C |
| **Attachment Method:** | Adhesive and screw |
| **Weight:** | 15g |